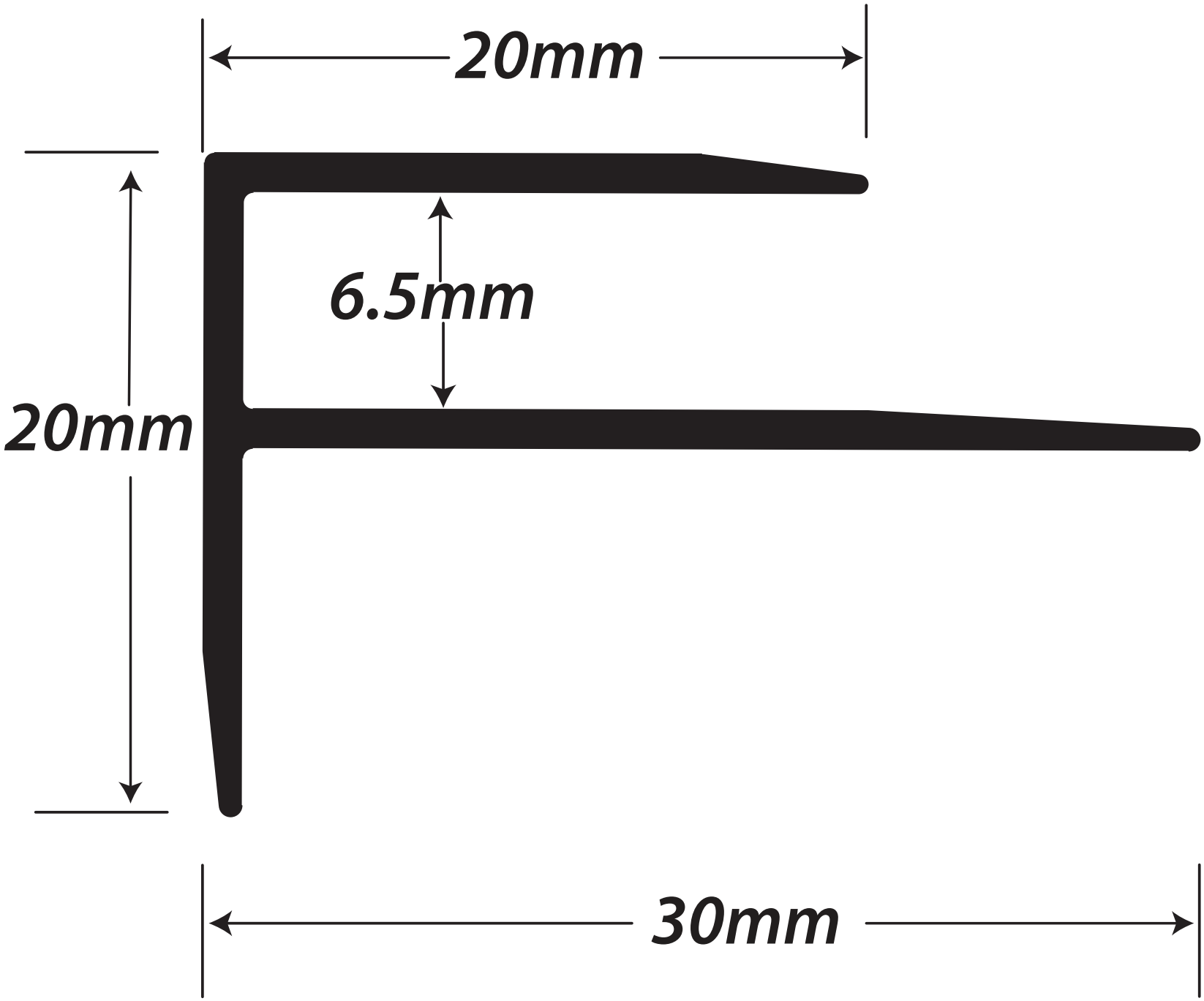
20mm
6.5mm
20mm
30mm