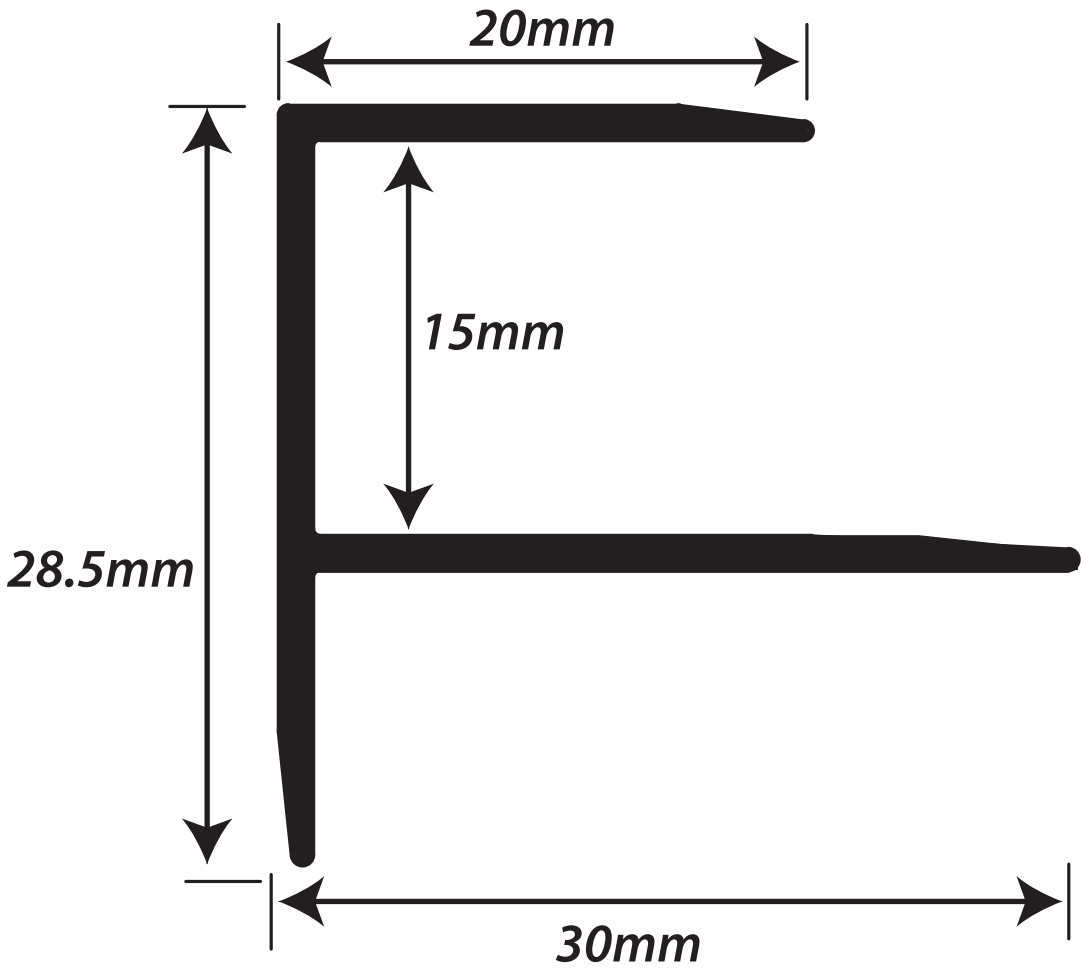
20mm
15mm
28.5mm
30mm